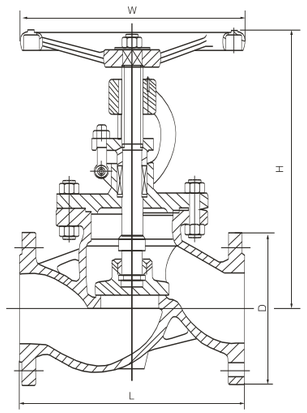

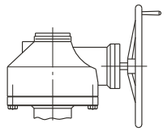

DIN Globe Valves PN1.6~4.0MPa

DIN3202 F1 Series

Dimensions data mm

Pressure(MPa)	PN1.6MPa															Flange Ends:DIN2543
Size mm	15	20	25	32	40	50	65	80	100	125	150	200	250	300	350	400
L	130	150	160	180	200	230	290	310	350	400	480	600	730	850	980	1100
H	240	260	276	285	300	305	354	402	437	496	541	699	815	914	1189	1350
W	120	140	160	160	180	200	200	750	250	300	350	400	450	500	550	600
D	95	105	115	140	150	165	185	200	220	250	285	340	405	460	520	580
Pressure(MPa)	PN2.5MPa															Flange Ends:DIN2544
Size mm	15	20	25	32	40	50	65	80	100	125	150	200	250	300	350	400
L	130	150	160	180	200	230	290	310	350	400	480	600	730	850	980	1100
H	240	260	276	285	300	325	363	415	453	505	556	744	864	948	1269	1450
W	120	140	160	160	180	200	200	250	300	350	400	450	500	550	600	600
D	95	105	115	140	150	165	185	200	235	270	300	360	425	485	555	620
Pressure(MPa)	PN4.0MPa															Flange Ends:DIN2545
Size mm	15	20	25	32	40	50	65	80	100	125	150	200	250	300	350	400
L	130	150	160	180	200	230	290	310	350	400	480	600	730	850	980	1100
H	240	260	276	285	300	325	370	430	480	532	589	783	888	965	1285	1512
W	120	140	160	160	180	200	200	250	300	350	400	450	500	550	600	600
D	95	105	115	140	150	165	185	200	235	270	300	375	450	515	580	600

DIN Globe Valves PN6.4~10.0MPa

DIN3202 F2 Series

Dimensions data mm

Pressure(MPa)	PN6.4MPa															Flange Ends:DIN2546
Size mm	15	20	25	32	40	50	65	80	100	125	150	200	250	300	350	400
L	130	150	160	180	200	300	340	380	430	500	550	650	775	900	1025	1150
H	240	260	276	285	300	305	354	402	437	496	541	699	815	914	1189	1350
W	120	140	160	160	180	200	200	750	250	300	350	400	450	500	550	600
D	105	125	140	150	170	180	205	215	250	295	345	415	470	530	600	670
Pressure(MPa)	PN10.0MPa															Flange Ends:DIN2547
Size mm	15	20	25	32	40	50	65	80	100	125	150	200	250	300	350	400
L	130	150	160	180	200	300	340	380	450	500	550	650	775	900	1025	1150
H	240	260	276	285	300	325	363	415	453	505	556	744	864	948	1269	1450
W	120	140	160	160	180	200	200	250	300	350	400	450	500	550	600	600
D	105	125	140	150	170	195	220	230	265	315	355	430	505	585	655	715

Product structural features

Check valve seal acc. to DIN is applicable to the cutting and connection of pipelines medium that are used in various industries such as petroleum, chemical industry, pharmacy, chemical fertilizer, electric power industry, etc under nominal pressure of PN1.6~16MPa, and working temperature within -110~600℃

Main structural features

1. This product has logical structure, reliable seal, excellent performance and nice design.
2. The seal surface is build-up welding with Co hard alloy, which is attrition-resistant, corrosion-resistant, has good friction resistant and long life.
3. The part material, flange and butt weld end dimension may be selected according to current operating condition and users' requirement, so that meeting the requirements of various engineering.

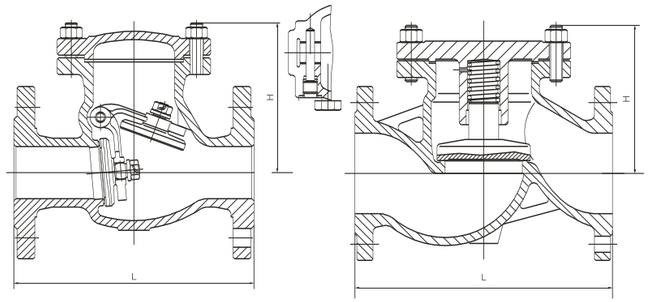

Technical specificastion	
Design Standard	DIN3840 / En14341
Face to Face	DIN3202 (F1 /F2/F6) / EN 558-1
Flange Ends	DIN2543~DIN2547 / EN 1092-1
Test & Inspection	DIN3230 / En12266

Products performance specification

Nominal Pressure (MPa)	Shell Test (MPa)	Sealing Test (MPa)	Suitable Temp(℃)	Suitable Medium
1.6	2.4	1.76	-110~600℃	Water Oil & Gas
2.5	3.75	2.75		
4.0	6.0	4.4		
6.4	9.6	7.04		

Main part material and property

Body	GS-C25								1.4308		
Disc	GS-C25			1.4308		1.4408		Monel			
Wedge Disc Sealing Face	13Cr	13Cr	STL	1.4308	STL	1.4408	STL	Monel	1.4308	1.4308	STL
Seat Ring Sealing Face	13Cr	STL	STL	1.4308	STL	1.4408	STL	Monel	1.4308	STL	STL
Body	1.4408			1.4306			1.4301				
Disc											
Wedge Disc Sealing Face	1.4408	1.4408	STL	1.4306	1.4306	STL	1.4301	1.4301	STL		
Seat Ring Sealing Face	1.4408	STL	STL	1.4306	STL	STL	1.4301	STL	STL		

Noted: The chart above only lists out some common composition of steel check valve parts. We may provide other different parts material composition according to the customer's request or the actual valve working condition.

Lift Check Valve

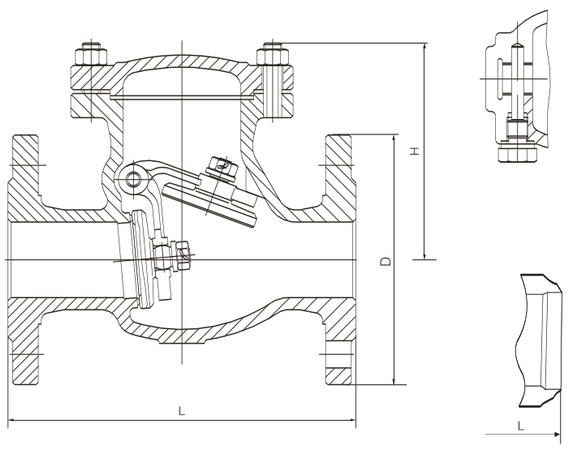

Swing Check Valve

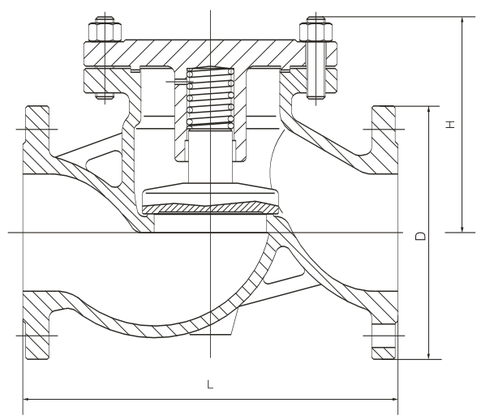

DIN Swing & Lift Check Valves PN1.6~4.0MPa

DIN3202 F1 Series

Dimensions data mm

Pressure(MPa)		PN1.6MPa										Flange Ends:DIN2543
Size	mm	50	65	80	100	125	150	200	250	300	350	400
L		230	290	310	350	400	480	600	730	850	980	1100
H		135	140	145	165	250	285	315	390	420	450	520
D		165	185	200	220	250	285	340	405	460	520	580
Pressure(MPa)		PN2.5MPa										Flange Ends:DIN2544
Size	mm	50	65	80	100	125	150	200	250	300	350	400
L		230	290	310	350	400	480	600	730	850	980	1100
H		135	140	150	170	265	295	345	400	435	460	530
D		165	185	200	235	270	300	360	425	485	555	620
Pressure(MPa)		PN4.0MPa										Flange Ends:DIN2545
Size	mm	50	65	80	100	125	150	200	250	300	350	400
L		230	290	310	350	400	480	600	730	850	980	1100
H		145	160	180	190	280	310	350	430	450	480	550
D		165	185	200	235	270	300	375	450	515	580	600

Swing Check Valves PN1.6~2.5MPa

DIN3202 F6 Series

Dimensions data mm

Pressure(MPa)		PN1.6MPa										Flange Ends:DIN2543
Size	mm	50	65	80	100	125	150	200	250	300	350	400
L		200	240	260	300	350	400	500	600	700	800	900
H		135	140	145	165	250	285	315	390	420	450	520
D		165	185	200	220	250	285	340	405	460	520	580
Pressure(MPa)		PN2.5MPa										Flange Ends:DIN2544
Size	mm	50	65	80	100	125	150	200	250	300	350	400
L		200	240	260	300	350	400	500	600	700	800	900
H		135	140	150	170	265	295	345	400	435	460	530
D		165	185	200	235	270	300	360	425	485	555	620

DIN Swing Check Valves PN6.4~16.0MPa

DIN3202 F2 Series

Dimensions data mm

Pressure(MPa)		PN6.4MPa										Flange Ends:DIN2546
Size	mm	50	65	80	100	125	150	200	250	300	350	400
L		300	340	380	430	500	550	650	775	900	1025	1150
H		170	190	205	240	300	335	390	450	520	570	620
D		180	205	215	250	295	345	415	470	530	600	670
Pressure(MPa)		PN10.0MPa										Flange Ends:DIN2547
Size	mm	50	65	80	100	125	150	200	250	300	350	400
L		300	340	380	430	500	550	650	775	900	1025	1150
H		205	220	235	270	300	340	390	450	530	590	650
D		195	220	230	265	315	355	430	505	585	655	715
Pressure(MPa)		PN16.0MPa										Flange Ends:DIN2548
Size	mm	50	65	80	100	125	150	200	250	300	350	400
L		300	340	380	430	500	550	650	775	900		
H		210	230	245	280	320	360	400	470	550		
D		195	220	230	265	315	355	430	515	585		